Whole MILK

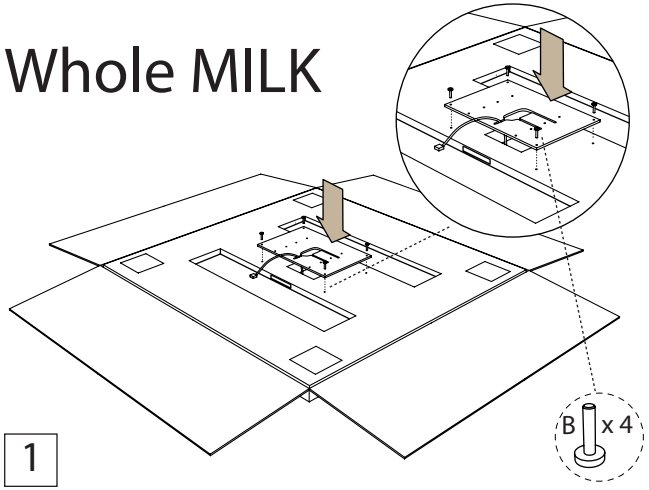

1

Keep the tabletop in the packaging.
The packaging is opened so that the backside of the table-top is accessible. The top plate is mounted and placed as shown on the illustration. Use the enclosed allen key.
The raise/lower cable is let through the cutout in the iron plate.

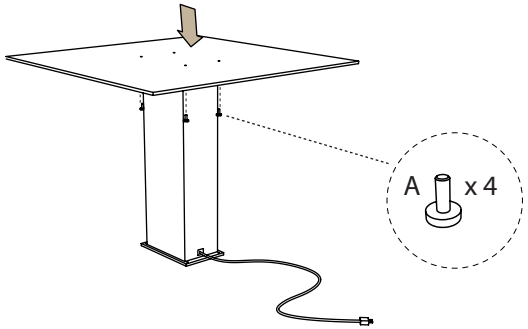

2

The column is turned with the cable downwards.
The floor plate is mounted as shown on the illustration.

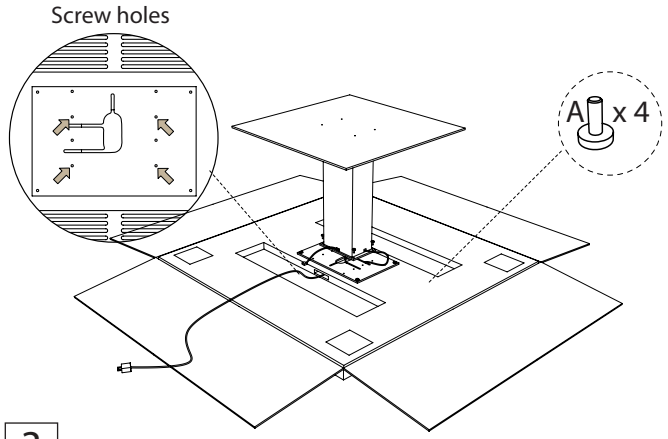

3

The column with the mounted floor plate is lifted on top of the tabletop and mounted. – see illustration 4.
NB: The column is mounted in the assigned screw holes. – see detail drawing.

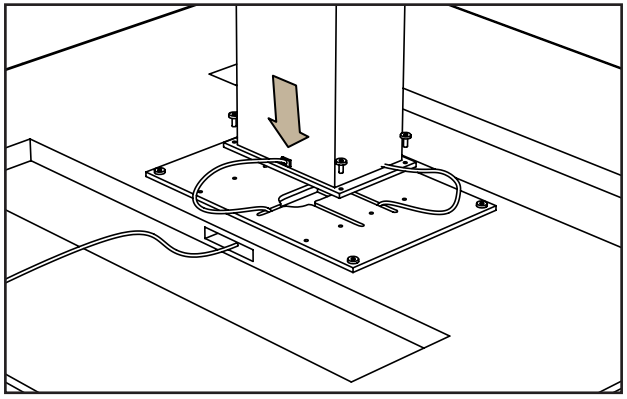

4

The power cord is let through the cutout in the top plate and into the cable compartment.
The raise/lower cable is inserted into the plug at the backside of the column (see arrow).

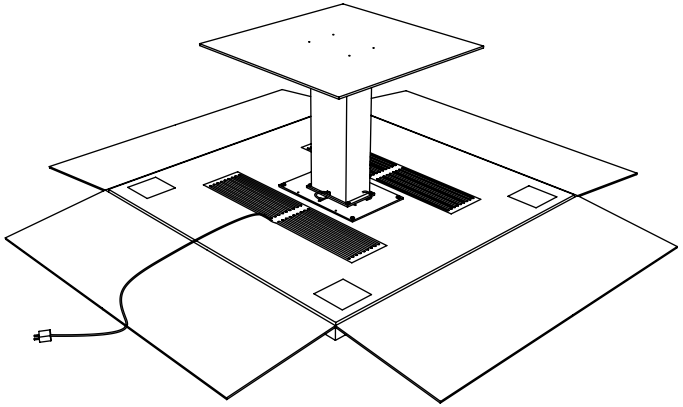

5

If you have bought the large cable compartment it is mounted in step 5.
A socket is placed in the cable compartment (socket is not included).
The only cord coming out of the table is the cord from the socket, everything else is inside the cable compartment.
The table can now be turned and the packaging removed.

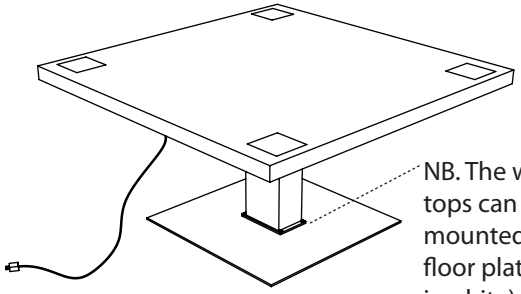

NB. The white screw tops can now be mounted. (only if your floor plate and column is white)

6

This is how your MILK table is supposed to look.
Compartment lids and accessories can now be placed.
Well done!

included tools

screw - A

screw - B

Allen key